SERVICE MANUAL · AUSTRALIAN EDITION

CHINCHILLA 350

SERVICE MANUAL

MODEL BD350-15A

BENDA MOTO AUSTRALIA · VERSION 1

BENDA

PREFACE

Dear Rider,

This service manual sets out the maintenance schedule for your BENDA Chinchilla 350 (model BD350-15A) and explains the checks, adjustments and maintenance that keep it safe, reliable and performing at its best. Read it together with your owner's manual.

All maintenance, adjustment and repair work described in this manual must be carried out by an authorised BENDA Moto Australia dealer or a licensed motorcycle mechanic, using genuine parts, the specified fluids and the correct tools. Owners must not service, adjust or repair the motorcycle themselves. This manual tells owners what is due and when, and gives technicians the specifications they need.

We continually improve our products, so your motorcycle may differ slightly from this manual. Illustrations are for reference only; the actual product takes precedence.

BENDA Moto Australia Pty Ltd
www.bendamoto.com.au

IMPORTANT NOTES

All work described in this manual must only be carried out by an authorised BENDA Moto Australia dealer or a licensed motorcycle mechanic. Work on the motorcycle only on level ground with the engine switched off, and let the engine and exhaust cool before starting. Use the specified parts, fluids and torque settings.

This manual is part of the motorcycle. If you sell the motorcycle, please pass this manual on to the new owner.

The copyright of the original manual belongs to Hangzhou Saturn Power Technology Co., Ltd. This Australian edition is published by BENDA Moto Australia Pty Ltd. No part of this manual may be reproduced without written consent.

Danger / Warning / Note

Please read the following carefully and keep these points in mind.

⚠ DANGER

Indicates a matter that concerns the personal safety of the rider or technician. Ignoring it may result in injury.

⚠ WARNING

Indicates precautions that must be taken to avoid damaging the motorcycle.

⚠ NOTE

Provides additional information that makes maintenance easier or clarifies important instructions.

CONTENTS

I Servicing Your Motorcycle **4**
1.1 Scheduled servicing and your warranty 4
1.2 Who does the work 4
1.3 Capped price servicing and booking 4

II Maintenance Schedule **5**
2.1 Scheduled services 5
2.2 Maintenance items 5
2.3 Notes 6

III Engine Maintenance **7**
3.1 Checking the engine oil level 7
3.2 Oil specification 7
3.3 Changing the engine oil and oil filter 7
3.4 Gear oil 8
3.5 Spark plugs 8
3.6 Air filter 9
3.7 Valve clearances 9

IV Throttle and Idle Speed **10**
4.1 Throttle 10
4.2 Idle speed 10
4.3 Automatic clutch 10

V CVT and Drive Belts **11**
5.1 CVT drive belt, pulleys and clutch 11
5.2 Final drive belt inspection 11
5.3 Final drive belt tension 11
5.4 Final drive belt replacement 11

VI Brakes and ABS **12**
6.1 ABS (anti-lock braking system) 12
6.2 Front brake 12
6.3 Rear brake 12
6.4 Brake discs 13
6.5 Brake pads 13
6.6 Brake fluid 13

VII Battery and Fuses **15**
7.1 Battery type 15
7.2 Removing and refitting the battery 15
7.3 Charging and care 15
7.4 Fuses 16

VIII Cooling System **17**
8.1 Coolant 17
8.2 Checking and topping up 17

IX Cleaning, Storage and Disposal **19**
9.1 Cleaning 19
9.2 Storage 19
9.3 Service life and disposal 19

X Adjustment Data and Torque Settings **20**
10.1 Adjustment data 20
10.2 Torque settings 20

XI Technical Specifications **21**

XII Troubleshooting and Fault Codes **23**

12.1 Common faults 23

12.2 Fault codes 24

XIII Circuit Diagrams **26**

XIV Service Record **28**

I SERVICING YOUR MOTORCYCLE

Regular servicing keeps your Chinchilla 350 safe, reliable and performing as it should. This chapter explains who should service your motorcycle, how servicing affects your warranty, and how to book.

1.1 Scheduled servicing and your warranty

- Have every scheduled service carried out by an authorised BENDA Moto Australia dealer or a licensed motorcycle mechanic, at the intervals in Chapter II.
- To keep your warranty valid, all scheduled servicing must be carried out in accordance with manufacturer requirements, and you must keep your service and maintenance records. Ask the workshop to complete the service record in Chapter XIV at every service.
- Warranty repairs must be performed by an authorised BENDA Moto Australia dealer unless otherwise approved in writing.

⚠ WARNING

The warranty does not cover damage caused by failure to carry out scheduled maintenance, by repairs performed by unauthorised repairers, or by the use of non-approved fuels, lubricants or fluids. Failure to meet the warranty conditions may result in a claim being declined.

1.2 Who does the work

All maintenance, adjustment and repair work described in this manual must be carried out by an authorised BENDA Moto Australia dealer or a licensed motorcycle mechanic. Owners must not service, adjust or repair the motorcycle themselves.

Riders should carry out the pre-ride checks in the owner's manual before every ride. These are visual checks only. If a check finds a problem – for example a low fluid level, a worn tyre, a loose part or a warning light – do not ride. Have the motorcycle inspected and repaired by an authorised dealer or licensed motorcycle mechanic first.

⚠ WARNING

Maintenance or repairs carried out by anyone other than an authorised BENDA Moto Australia dealer or a licensed motorcycle mechanic can make the motorcycle unsafe and may result in a warranty claim being declined.

1.3 Capped price servicing and booking

Capped price servicing. Every scheduled service up to 16,000 km or 4 years, whichever comes first, is charged at a fixed capped price, and your first service is complimentary. Capped prices are per scheduled service and include GST, labour, and the parts and consumables that service calls for. Any additional work found during a service is quoted separately.

Prepaid service plans. You can prepay your scheduled services with a 2 year / 8,000 km, 3 year / 12,000 km or 4 year / 16,000 km plan. A prepaid plan is held against your motorcycle's VIN, so it goes with the bike if you sell it. Each plan ends at its years or its kilometres, whichever comes first, and is fixed at the price you paid.

Current capped service and prepaid plan prices for the Chinchilla 350 are listed at **www.bendamoto.com.au/book-service**. Prices may change.

Booking a service. Book online at **www.bendamoto.com.au/book-service**, call **1800 023 632**, or contact your local authorised BENDA Moto Australia dealer (find your nearest at **www.bendamoto.com.au/find-us**). Have your registration number or VIN ready.

II MAINTENANCE SCHEDULE

Have your motorcycle serviced at the distance or time shown, whichever comes first. Times are counted from when the motorcycle was new. Clean the motorcycle before each service.

2.1 Scheduled services

Service	Due at (whichever first)	Main work	Price
First service	1,000 km	Engine oil, oil filter and gear oil replaced; CVT drive belt inspected; post running-in inspection and adjustment	Complimentary
4,000 km service	4,000 km or 1 year	Engine oil, oil filter and gear oil replaced; CVT drive belt inspected; inspection and adjustment	Capped price
8,000 km service	8,000 km or 2 years	Engine oil, oil filter and gear oil replaced; CVT drive belt inspected; inspection and adjustment	Capped price
12,000 km service	12,000 km or 3 years	Engine oil, oil filter, gear oil and air filter replaced; CVT drive belt inspected; inspection and adjustment	Capped price
16,000 km service	16,000 km or 4 years	Engine oil, oil filter and gear oil replaced; CVT drive belt inspected; inspection and adjustment	Capped price
20,000 km service	20,000 km or 5 years	Engine oil, oil filter and gear oil replaced; valve clearances checked and adjusted; spark plugs replaced; CVT drive belt and final drive belt replaced; inspection and adjustment	Quoted
Thereafter	Every 4,000 km or 1 year	Engine oil, oil filter and gear oil replaced, plus any items due from section 2.2	Quoted

Items in section 2.2 that fall due by time, such as coolant and brake fluid every 2 years, are carried out at the scheduled service where they fall due.

2.2 Maintenance items

All items are inspected, adjusted or replaced by an authorised BENDA Moto Australia dealer or a licensed motorcycle mechanic. Where an item says "check before every ride", this is a visual pre-ride check by the rider, as described in the owner's manual.

Item	Interval
Engine oil	Check the level before every ride. Replace at 1,000 km, then every 4,000 km or 1 year.
Oil filter	Replace at 1,000 km, then every 4,000 km or 1 year.
Gear oil (final reduction)	Replace at 1,000 km, then every 4,000 km or 1 year. Replace more often after riding in the rain, long trips or heavy loads.
Air filter	Inspect every 1,000 km and clean every 2,000 km. Replace every 12,000 km, or sooner if it is dirty when inspected.
Spark plugs	Inspect every 2,000 km. Replace every 20,000 km.
Valve clearances	Check and adjust every 20,000 km.
CVT drive belt, pulleys and clutch	Inspect at 1,000 km and at every scheduled service. Replace the CVT drive belt every 20,000 km, or sooner if worn.

Final drive belt	Inspect before every ride. Check tension at every scheduled service. Replace every 20,000 km.
Throttle	Check before every ride. Inspect and adjust at every scheduled service.
Fuel tank and fuel lines	Check before every ride. Repair or replace damaged or aged parts promptly.
Coolant	Check the level before every ride. Replace every 2 years.
Brake pads	Check before every ride. Inspect every 1,000 km and replace when worn to the limit.
Brake fluid	Check the level before every ride. Replace every 2 years.
Front and rear brake systems	Check before every ride. Inspect at every scheduled service.
Switches, lights and horn	Check before every ride. Inspect at every scheduled service.
Battery	Check every month. Inspect at every scheduled service.
Fuses and wiring	Inspect at every scheduled service.
Suspension	Inspect at every scheduled service.
Nuts, bolts and fasteners	Check before every ride. Inspect at every scheduled service.
Wheels and tyres	Check before every ride. Inspect at every scheduled service.
Steering head bearings	Inspect at every scheduled service.
Engine	Inspect at every scheduled service.

2.3 Notes

- Where an item has both a distance and a time, it is due at whichever comes first.
- Once the odometer passes the highest figure shown, keep repeating each item at the same interval.
- If the motorcycle is ridden in dusty, muddy or wet conditions, the air filter should be cleaned more often.

⚠ NOTE

If you often ride in dusty or wet conditions, on rough roads, with heavy loads or on many short trips, have your motorcycle serviced more often. An authorised BENDA Moto Australia dealer or a licensed motorcycle mechanic can advise a schedule to suit the way you ride.

III ENGINE MAINTENANCE

Engine oil reduces friction, seals, cools and cleans the engine, and protects it from rust. Poor-quality, old or insufficient oil speeds up engine wear and can cause overheating, clutch wear or burnout, loss of power, abnormal noise and oil burning.

3.1 Checking the engine oil level

Check the oil level at every scheduled service, and whenever the oil warning light comes on:

1. Start the engine, let it run for 3 minutes, then switch it off and wait 3 minutes.
2. Stand the motorcycle upright on level ground.
3. Check that the oil level is between the upper and lower marks on the dipstick.
4. If the level is low, remove the dipstick and top up with the specified oil. Refit the dipstick and check for leaks.

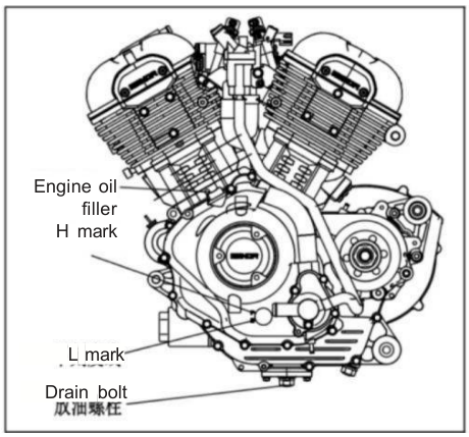

Figure 1 Checking the engine oil level

3.2 Oil specification

Item	Specification
Engine oil	SAE 10W-40 four-stroke motorcycle engine oil, API SN or higher, JASO MA
Oil change, filter not replaced	Approximately 1.8 L
Oil change with new filter	Approximately 2.0 L

⚠ WARNING

Using poor-quality or incorrect oil can seriously affect engine performance and life.

Oil that is not changed at the specified intervals deteriorates and causes excessive wear.

Running the engine with too little oil will seriously damage it.

3.3 Changing the engine oil and oil filter

Replace the engine oil and oil filter at 1,000 km, then every 4,000 km or 1 year.

1. Run the engine for 3 minutes, switch it off and place a drain container under the drain bolt.
2. Remove the oil filler plug and O-ring, then remove the drain bolt and metal sealing washer and drain the oil. Take care: the engine and oil may be hot.
3. Remove the oil filter element and fit a new one. Tighten to 25 N·m.
4. Refit the drain bolt with a new sealing washer and tighten to 23 N·m.
5. Fill with approximately 2.0 L of new oil (1.8 L if the filter was not replaced). Refit the filler plug and O-ring and tighten to 20 N·m.
6. Run the engine at varying speeds for 3 minutes and check for leaks. Switch off, wait 3 minutes and check the level on the dipstick. Top up if needed.

⚠ DANGER

Hot engine oil and exhaust pipes can cause burns. Let the drain bolt and exhaust cool before draining the oil.

Engine oil is harmful if swallowed and prolonged skin contact can cause skin disease. Keep oil away from children and pets, wear long sleeves and gloves when changing oil, and wash any skin contact thoroughly with soap and water.

⚠ NOTE

Dispose of used oil responsibly. Never pour it on the ground or put it in household rubbish – seal it in a container and take it to your local recycling centre.

3.4 Gear oil

The final reduction gearbox in the CVT has its own oil supply. Gear oil: **SAE 85W-140 gear oil**. Change quantity: approximately **250 ml** (300 ml when dry). Replace at 1,000 km, then every 4,000 km or 1 year, and more often after riding in the rain, long trips or heavy loads.

1. Stand the motorcycle upright on level ground. Warm the engine briefly so the oil drains freely – take care, the engine and oil may be hot.
2. Remove the gear oil filler plug and washer, then the drain bolt and sealing washer, and drain the gear oil.
3. Refit the drain bolt with a new sealing washer.
4. Fill with approximately 250 ml of the specified gear oil through the filler, until the level reaches the bottom edge of the filler hole.
5. Refit the filler plug and washer and tighten to 25 N·m. Check for leaks.

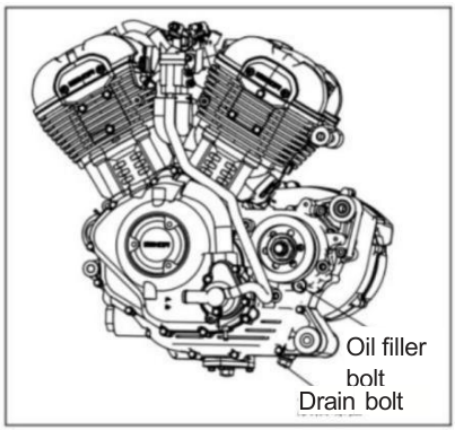

Figure 2 Gear oil filler and drain bolts

3.5 Spark plugs

Specified spark plug: **NGK B8RC**. Electrode gap: **0.8–0.9 mm**.

1. Inspect the spark plugs every 2,000 km and replace them every 20,000 km.
2. Remove the spark plug cap and clean away dirt around the plug, then remove the plug with a 16 mm spark plug socket.
3. Remove carbon and dirt with a wire brush. Check the plug for damage, burnt electrodes and a damaged sealing washer; replace it if any are found.
4. Check the electrode gap with a feeler gauge. The correct gap is 0.8–0.9 mm.
5. Screw the plug in by hand first, then tighten it with the spark plug socket.

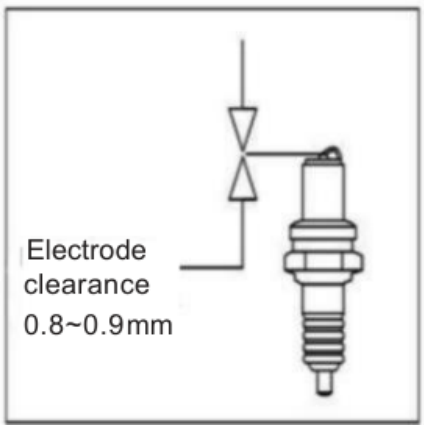

Figure 3 Spark plug electrode gap

⚠ WARNING

Dirt entering the spark plug hole can damage the engine. Cover the hole while the plug is out.

If the electrode colour is abnormal, fit a new plug of the specified type. Plugs of a different heat range can seriously damage the engine, and such damage is not covered by warranty.

Overtightening or cross-threading a plug can damage the cylinder head. Always start the plug by hand.

3.6 Air filter

- Inspect the air filter element every 1,000 km and clean it every 2,000 km.
- Replace the element every 12,000 km, or sooner if it is dirty, wet or damaged when inspected. Inspect and clean it more often in muddy, wet or dusty conditions.
- A dirty filter restricts airflow, reducing power and increasing fuel consumption.
- The element is a sponge (foam) type. Wash it in clean water, let it dry, then soak it in clean engine oil and squeeze out the excess. If the foam has aged or is breaking up, replace it.
- At each service, remove the drain tube below the air filter housing and drain any oil that has collected.

Removing and refitting the air filter element

1. Remove the four screws securing the air filter upper cover.
2. Remove the element fixing screws and remove the element.
3. Refit in the reverse order, making sure the element is seated and sealed correctly.

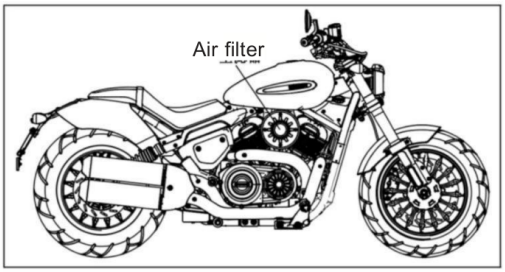

Figure 4 Air filter location

⚠ WARNING

Never start or run the engine without the air filter element fitted. The engine can backfire into the airbox and dirt will be drawn into the engine, causing serious wear.

Do not let water into the air filter when washing the motorcycle.

An incorrectly fitted element lets dust bypass the filter and damage the engine. Check that it is seated and sealed correctly.

3.7 Valve clearances

Valve clearances are checked and adjusted every 20,000 km. This work must only be carried out by an authorised BENDA Moto Australia dealer or a licensed motorcycle mechanic.

Valve	Clearance
Intake (engine cold)	0.03–0.06 mm
Exhaust (engine cold)	0.08–0.12 mm

IV THROTTLE AND IDLE SPEED

4.1 Throttle

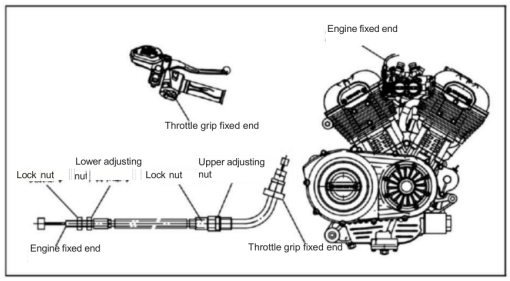

Figure 5 Throttle cable adjusters

Inspection

1. Check that the handlebars turn smoothly from full left to full right lock and that the steering stops work correctly.
2. Check that the throttle grip turns smoothly from fully closed to fully open and springs back to closed when released.
3. Check that the throttle cable moves freely and is in good condition.

Adjustment

1. Throttle grip free play: **2–6 mm**.
2. Make small adjustments with the upper adjuster: loosen the lock nut, turn the adjuster, then retighten the lock nut.
3. Make larger adjustments with the lower adjuster, where the cable joins the throttle body.
4. Lubricate the throttle cable regularly and never kink it.

⚠ DANGER

If the throttle cable is routed incorrectly, have it rerouted correctly.

If the cable is kinked, sticks or does not return, replace it.

After adjustment, the throttle must return to closed on its own and the idle speed must not rise when the handlebars are turned.

4.2 Idle speed

The throttle body stop screw is set at the factory and must not be adjusted. With the engine fully warm, the idle speed should be **1,600 ± 100 rpm**. If the idle is unstable, inspect the engine management and idle control system.

4.3 Automatic clutch

This motorcycle has a dry centrifugal clutch inside the CVT. It engages and disengages automatically and has no lever or adjustment. The clutch, pulleys and CVT drive belt are inspected at every scheduled service (Chapter V).

V CVT AND DRIVE BELTS

Power is transmitted from the engine through a CVT (continuously variable transmission) with a V-belt, an automatic centrifugal clutch and a final reduction gearbox, then to the rear wheel by a toothed final drive belt.

5.1 CVT drive belt, pulleys and clutch

Inspect the CVT drive belt, drive and driven pulleys and clutch at 1,000 km and at every scheduled service. Replace the CVT drive belt every 20,000 km, or sooner if it is cracked, glazed, frayed or worn. Replace it more often if the motorcycle is used for heavy loads, repeated hill climbing or other severe use.

> ⚠ **WARNING**
>
> **Keep oil and grease off the CVT drive belt and pulley faces. A contaminated belt slips and wears rapidly.**

5.2 Final drive belt inspection

Belt type: **1881-11M-26 (26 mm toothed belt)**.

Inspect the final drive belt and pulleys at every scheduled service for wear, cracks, damaged teeth or other defects. Riders should also check the belt drive before every ride; if any defect is found, the motorcycle must not be ridden until it has been inspected by an authorised dealer or licensed motorcycle mechanic.

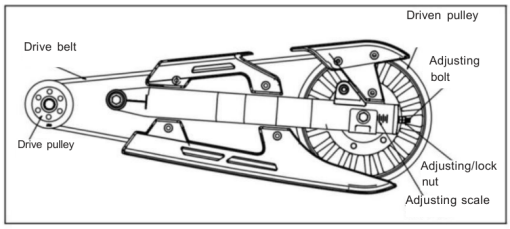

Figure 6 Final drive belt, pulleys and adjuster

5.3 Final drive belt tension

Belt tension is measured as the belt's natural frequency with a belt tension meter. Standard: **65–70 Hz**. For sustained hard riding: **85–90 Hz**. Service limit: 65 Hz. To adjust, loosen the rear axle nut and turn the adjusting nuts on both sides equally, keeping the alignment marks the same on both sides so the wheel stays in line. Recheck the tension at the tightest point, then tighten the rear axle nut to the specified torque (Chapter X).

5.4 Final drive belt replacement

The final drive belt is replaced every 20,000 km. The drive and driven pulleys are removed, the new belt fitted, and the pulleys refitted in the reverse order before the tension is set.

> ⚠ **WARNING**
>
> **Incorrect handling can break the belt's internal tension cords, causing it to lose strength and fail.**
>
> **Never twist, kink, knot, fold or turn the belt inside out.**
>
> **Do not lever the belt onto the pulleys or use sharp-edged tools on it.**
>
> **Never oil or lubricate the belt, and never try to open or repair it.**

VI BRAKES AND ABS

6.1 ABS (anti-lock braking system)

The ABS consists of a hydraulic unit, ABS control unit and return pump, mounted under the frame, with a wheel speed sensor on each wheel. It works on two independent circuits (front and rear). In normal braking it behaves like a conventional brake system. When the control unit detects that a wheel is about to lock, it adjusts the brake pressure – you may feel this as a slight pulsing at the brake lever or pedal.

When the ignition is switched on, the ABS warning light comes on and goes out once the motorcycle moves off. If it stays on, or comes on while riding, the ABS has a fault and will not operate. The brakes still work, but the wheels can lock. Have the ABS checked by an authorised dealer or licensed motorcycle mechanic as soon as possible.

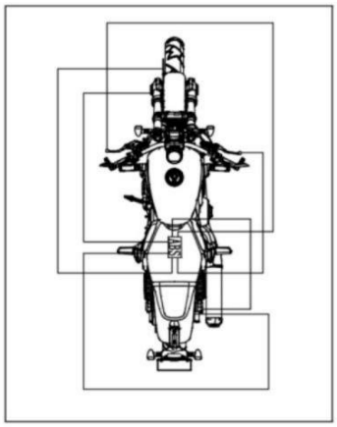

Figure 7 ABS components

⚠ WARNING

Modifications such as changing suspension travel, rim size, tyres, tyre pressures or brake pads can stop the ABS working correctly. Use only parts and tyres recommended by BENDA.

Have the ABS serviced and repaired as required.

6.2 Front brake

- Front brake lever free play: **5–10 mm**.
- Check the thickness of the brake disc and pads (sections 6.4 and 6.5).
- Check the fluid level in the reservoir, that the caliper works correctly, and that the brake hose and reservoir have no leaks or cracks.
- If the lever feels soft or spongy, there is air in the system. It must be bled before the motorcycle is ridden.

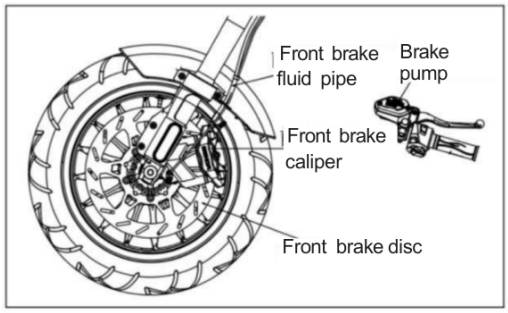

Figure 8 Front brake components

6.3 Rear brake

- Rear brake lever (left-hand) free play: **5–10 mm**.
- Check the thickness of the brake disc and pads (sections 6.4 and 6.5).
- Check the fluid level in the reservoir, that the caliper works correctly, and that the brake hose and reservoir have no leaks or cracks.
- If the lever feels soft or spongy, there is air in the system. It must be bled before the motorcycle is ridden.

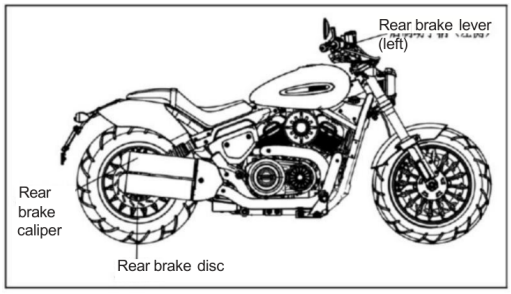

Figure 9 Rear brake components

6.4 Brake discs

Brake discs wear gradually. Measure the disc thickness at several points within the pad contact area and check the disc for damage, cracks or distortion. Replace a disc that is below the wear limit or is damaged, cracked or distorted.

Disc	Minimum thickness
Front	4.5 mm
Rear	4.5 mm

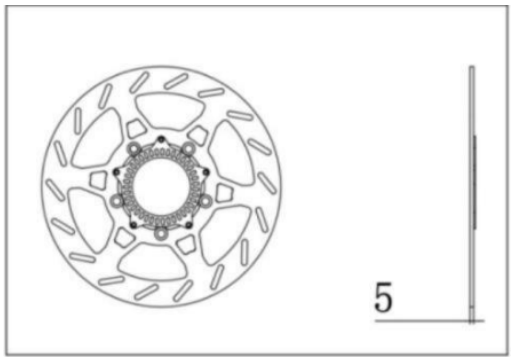

Figure 10 Measuring disc thickness

6.5 Brake pads

Measure the remaining friction material on each pad (dimension A). Replace the pads if any pad is thinner than **1.5 mm**, or if a pad is damaged or cracked. Always replace pads as a set.

Pads wear gradually and braking performance falls as they wear.

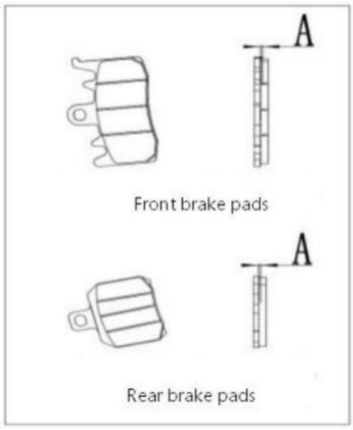

Figure 11 Brake pad wear limit (A)

6.6 Brake fluid

With the motorcycle positioned so the reservoir is level, check the fluid level through the level window. If it is below the lower mark, top up with the specified fluid.

Brake fluid: **DOT 4** (non-petroleum based). Do not mix different types or brands. Brake fluid is replaced every 2 years.

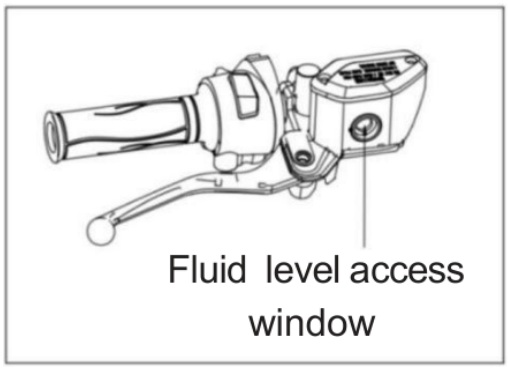

Figure 12 Brake fluid level window

⚠ WARNING

If the fluid level is below the mark, the system may be leaking or the pads may be fully worn. The motorcycle must not be ridden until the brake system has been inspected and repaired.

Brake fluid is corrosive. Do not spill it on painted or plastic parts. If it contacts your eyes or skin, rinse immediately with plenty of water and seek medical attention. If swallowed, seek medical attention immediately.

Hydraulic disc brakes work under high pressure. Never exceed the replacement intervals for pads and fluid. Repairs to the hydraulic system must only be carried out by qualified technicians.

⚠ NOTE

After fitting new discs or pads, do not ride straight away. Operate the brake lever and pedal several times until the pads seat firmly against the discs.

VII BATTERY AND FUSES

7.1 Battery type

Model: **MG12ZS-C**
Capacity: 12 V 11.2 Ah
Standard charge: 1–1.4 A for 6–8 hours

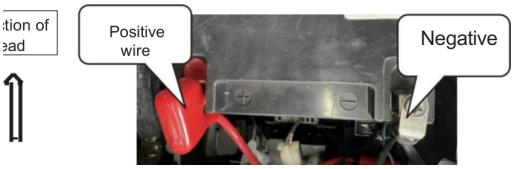

Figure 13 Battery terminals

7.2 Removing and refitting the battery

Removal

1. Unlock and remove the seat.
2. Remove the electrical box cover and the ECU mounting bracket.
3. Disconnect the negative (–) lead first.
4. Then disconnect the positive (+) lead.
5. Remove the battery.

Refitting

1. Refit in the reverse order of removal.
2. Connect the positive (+) lead first, then the negative (–) lead. Make sure neither terminal is loose and that the leads are not reversed. Reversed connections can damage electrical components.
3. Note the orientation of the positive and negative terminals, and refit both terminal covers.

⚠ DANGER

Route the positive and negative leads to the left and right sides of the battery and fit the terminal covers correctly. This prevents the terminals touching the battery hold-down plate and short-circuiting, which could damage the battery, cause an explosion or fire, and put people at risk. Below 0 °C the battery voltage must be at least 13 V for reliable starting.

7.3 Charging and care

- Charge at one-tenth of the battery capacity – for example, a 10 Ah battery at 1 A.
- With regular riding, the charging system keeps the battery charged. Occasional or short trips may leave it low, and all batteries self-discharge over time.
- If the battery voltage is below 12.8 V, charge it.
- If the motorcycle will not be used for more than two weeks, the battery should be charged. For longer periods, it should be removed, stored charged and recharged regularly.
- Keep the terminals clean, and always replace the battery with one of the same model and specification.

⚠ NOTE

Overcharging or undercharging shortens battery life. Do not use an automatic fast charger.

⚠ DANGER

Battery terminals and related parts contain lead. Wash your hands after handling them.

Keep batteries out of reach of children.

Batteries contain sulfuric acid and lead. Dispose of or recycle used batteries according to local regulations – never put them in household rubbish.

7.4 Fuses

The fuse box holds the following plug-in fuses: main 30 A, ABS motor 25 A, ECU 20 A, cooling fan 20 A, lighting 15 A, ABS ECU 15 A and ignition 10 A. Two spare 20 A fuses are kept in the fuse box.

If a fuse blows repeatedly, there may be a short circuit or overload. Check the electrical system. To replace a fuse, pull out the blown fuse and push in a spare of the same rating.

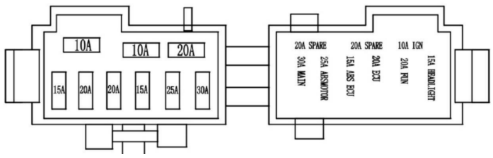

Figure 14 Fuse boxes

⚠ WARNING

Switch off the ignition and all electrical switches before checking or replacing a fuse. Never fit a fuse of a different rating – this can damage the electrical system, cause a fire, or cause the lights or engine to fail while riding.

VIII COOLING SYSTEM

The cooling system prevents the engine overheating. Correct use and maintenance of the cooling system extends engine life. The radiator is at the front of the engine; dust and dirt are cleaned from it at every service, and more often in dusty or muddy conditions.

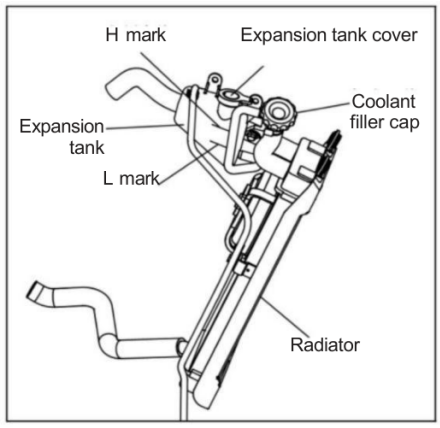

Figure 15 Cooling system

8.1 Coolant

Use a ready-mixed coolant made for aluminium engines. It contains antifreeze and corrosion, foam and scale inhibitors, and the operating temperature range is shown on the container. If mixing concentrate, use soft (distilled or purified) water; a 40–50% concentration gives the best freeze protection.

Cooling system capacity: **approximately 1,500 ml**. Coolant is replaced every 2 years.

> ⚠ **NOTE**
>
> **Never use tap water or any other liquid in place of coolant – this can damage the engine.**
>
> **Coolant for aluminium engines is available from authorised BENDA Moto Australia dealers.**

8.2 Checking and topping up

1. Park the motorcycle on level ground on its side stand and let the engine cool. Hot coolant can cause burns.
2. Check that the coolant level in the reserve tank is between the upper and lower marks.
3. If the level is at or below the lower mark, remove the reserve tank cap (and the radiator cap if required) and top up to the upper mark with the specified coolant.
4. Refit the caps securely.

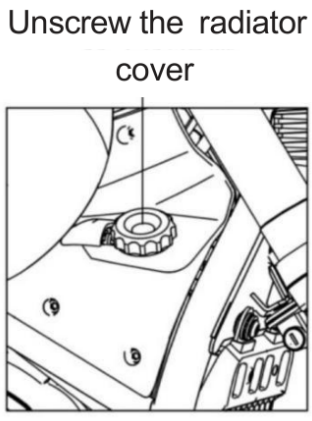

Figure 16 Topping up the coolant

Storing coolant

- Store coolant in a sealed container in a cool, dry place, out of reach of children.
- Keep it free of oil and fuel, and never mix or store different brands together.

⚠ DANGER

Antifreeze is toxic and corrosive. Keep it off rubber parts, paintwork and skin; rinse immediately with water if it is spilled.

Drain the coolant before loosening the cylinder head nuts, so it cannot enter the crankcase.

Never open the radiator cap while the engine is hot. Wait until the engine has cooled below 60 °C.

IX CLEANING, STORAGE AND DISPOSAL

9.1 Cleaning

1. Clean the motorcycle before each service and regularly between services – this helps reveal damage, wear or oil leaks early.
2. Let the engine cool, then rinse with clean water. After cleaning, dry the motorcycle, start the engine and let it run for a few minutes. Check that the front and rear brakes work normally before riding.
3. Do not use high-pressure water on the headlight, indicators, ignition switch, switch blocks, instruments, electrical parts and wiring, battery, air filter, wheel hubs, muffler outlets, the area under the fuel tank or the cylinder heads. Clean these areas with a cloth.
4. Braking performance may be reduced after washing. Test the brakes and make sure they work normally before riding.

9.2 Storage

Store the motorcycle in a dry, well-ventilated place with little temperature variation. Before storing it for more than 30 days, have any repairs carried out first, then:

1. Clean and dry the motorcycle and wax all painted surfaces.
2. Drain the fuel tank and spray rust inhibitor inside the tank.
3. Drain the engine oil completely and refill with new oil.
4. Remove the spark plugs and pour a small amount (15–20 ml) of engine oil into each cylinder. Refit the plugs, switch on the ignition and press the start button for 2–3 seconds to spread the oil.
5. Remove the battery, clean any corrosion from the terminals and connectors, and store it in a cool, dry, ventilated place out of direct sunlight.
6. Inflate the tyres to the specified pressure and support the motorcycle so both wheels are off the ground.
7. Cover the air intake and muffler outlets with a cloth soaked in clean engine oil to keep moisture out.
8. Cover the motorcycle with a breathable cover.

Returning the motorcycle to use

1. Remove the cover and clean the motorcycle.
2. Check the battery voltage. If it is below 12.8 V, slow-charge it before refitting.
3. Remove the rust inhibitor from the fuel tank and fill with fresh fuel.
4. Test-ride the motorcycle in a safe place to check that everything works normally.

9.3 Service life and disposal

Follow the requirements of your state or territory road authority for the service life and disposal of the motorcycle.

- Used engine oil: collect it in a sealed container and take it to an oil recycling facility. Never pour it on the ground or into drains.
- Used batteries, bulbs, body parts, filters, tyres and metal parts: sort them and take them to an appropriate recycling facility. Never empty battery acid onto the ground.
- When the motorcycle reaches the end of its life, dispose of it in line with your road authority's requirements.

X ADJUSTMENT DATA AND TORQUE SETTINGS

10.1 Adjustment data

Item	Value
Front brake lever free play	5–10 mm
Rear brake lever (left-hand) free play	5–10 mm
Throttle grip free play	2–6 mm
Spark plug gap	0.8–0.9 mm
Valve clearance – intake (engine cold)	0.03–0.06 mm
Valve clearance – exhaust (engine cold)	0.08–0.12 mm
Final drive belt tension (frequency)	65–70 Hz
Idle speed	1,600 ± 100 rpm

10.2 Torque settings

Fastener	Torque
Front axle nut (M14)	90–110 N·m
Rear axle nut (M16)	100–130 N·m
Swingarm pivot nut (M14)	90–110 N·m
Rear shock absorber to frame and swingarm bolts (M10)	35–45 N·m
Upper triple clamp to handlebar riser bolts (M10)	45–59 N·m
Steering stem nut (M25)	20–24 N·m
Instrument bracket and handlebar riser bolts (M8)	18–28 N·m
Handlebar switch screws (M6)	3–5 N·m
Front brake caliper to fork bolts (M10)	40–50 N·m
Brake disc to hub bolts (M8)	18–28 N·m
Brake hose union bolts (M10)	33–45 N·m
Engine front hanger to frame bolts (M10)	45–59 N·m
Engine hanger to frame nuts (M10)	49–60 N·m
Driven pulley to pulley seat bolts (M10)	45–55 N·m
Engine oil drain bolt (M14)	23 N·m
Oil filler plug	20 N·m
Oil filter element (M14)	25 N·m
Gear oil filler plug	25 N·m
Spark plug cover bolt	10–12 N·m
Valve adjusting screw lock nut	14 N·m

XI TECHNICAL SPECIFICATIONS

Item	Specification
General	
Model code	BD350-15A
Manufacturer	Hangzhou Saturn Power Technology Co., Ltd
Model name	Chinchilla 350 Neo
Brand	BENDA
Vehicle type	Two-wheeled motorcycle
VIN format	H84PDRPAxxxxxxxxx
Seating capacity	2 (rider and one passenger)
Steering	Handlebar
Transmission	CVT automatic (continuously variable)
Clutch	Dry centrifugal (automatic)
Final drive	Toothed belt
Brakes	Front: disc; Rear: disc; ABS
Brake operation	Front: right-hand lever; Rear: left-hand lever
Traction control	TCS
Starting	Electric start
Dimensions, weights and capacities	
Length × width × height	2,190 × 895 × 1,050 mm
Wheelbase	1,485 mm
Minimum ground clearance	125 mm
Kerb weight	195 kg
Maximum load	180 kg
Fuel tank capacity	16 L
Number of tyres	2
Front tyre	120/80-16
Rear tyre	150/80-15
Electrical	
Ignition	ECU
Spark plug	NGK B8RC
Headlight	12 V LED
Indicators	12 V LED
Tail/brake light	12 V LED

Fuses	Main 30 A; ABS motor 25 A; ECU 20 A; cooling fan 20 A; lighting 15 A; ABS ECU 15 A; ignition 10 A; spares: 20 A (×2)
Battery	12 V 11.2 Ah (MG12ZS-C)
Engine	
Engine type	V-twin (two cylinders), liquid-cooled, SOHC
Engine model	BD2V58MP
Compression ratio	11.5:1
Displacement	343 cc
Maximum power	25 kW @ 8,700 rpm
Maximum torque	31 N·m @ 6,500 rpm
Bore × stroke	58 × 65 mm
Idle speed	1,600 ± 100 rpm
Engine oil	SAE 10W-40
Engine oil capacity	2.0 L (with filter change)
Gear oil	SAE 85W-140, 250 ml
Coolant capacity	1.5 L
Fuel	95 RON premium unleaded petrol or higher
Spark plug gap	0.8–0.9 mm
Transmission	
CVT ratio range	2.34–0.78
Performance	
Maximum speed	129 km/h
Fuel consumption	4.5 L/100 km

XII TROUBLESHOOTING AND FAULT CODES

The table below lists common faults and their likely causes. Diagnosis and repair must be carried out by an authorised BENDA Moto Australia dealer or a licensed motorcycle mechanic.

12.1 Common faults

Fault	Possible cause	Remedy
Engine will not start	No fuel in the tank	Add fuel
	Fuel pump blocked or faulty, or poor-quality fuel	Clean or replace
	Blown fuse	Check or replace
	Spark plug fouled with carbon or worn out	Check or replace
	Spark plug cap – poor contact or burnt out	Check or replace
	Ignition coil – poor contact or burnt out	Check or replace
	Crankshaft position sensor – poor contact or faulty	Check or replace
	Loose or poor wiring connections	Check or adjust
	Starter mechanism worn or damaged	Check or replace
	Valves or valve seats leaking (gum deposits or wear)	Check or replace
	Worn cylinder, piston or piston rings	Check or replace
	Intake air leak	Check or replace
Lack of power	Incorrect valve timing	Check or replace
	Heavy carbon deposits on valves and pistons (poor fuel or oil)	Repair or replace
	CVT drive belt worn or centrifugal clutch slipping	Inspect or replace
	Worn cylinder and piston rings	Check; change oil
	Brake dragging – brake adjusted too tight	Adjust
	Final drive belt over-tensioned	Check and adjust
	Engine overheating – incorrect mixture, poor oil or fuel, blocked cooling	Check or adjust
	Incorrect spark plug gap (should be 0.8–0.9 mm)	Adjust or replace
	Intake air leak	Adjust or replace
	Cylinder head or valve leakage	Check or replace
	ECU or electrical system fault	Inspect or repair
	Air filter clogged	Clean or replace
Headlight or tail light not working	Poor wiring connection	Check or repair
	Blown fuse	Check or replace
	Switch contacts poor or damaged	Check or replace
	Lamp or lamp holder faulty	Check or replace

	Regulator/rectifier – poor contact or burnt out	Check or replace
	Alternator coil – poor contact or burnt out	Check or replace
Horn not working	Battery flat	Charge or replace
	Horn button faulty	Check or replace
	Poor wiring connection	Check or repair
	Horn faulty	Replace

12.2 Fault codes

If the engine management system detects a fault, the engine malfunction indicator lights up and a fault code is stored. The code is read with a diagnostic tool. Fault code table (twin-cylinder EFI):

Code	Description
P0118	Cylinder temperature sensor circuit – high voltage or open circuit
P0117	Cylinder temperature sensor circuit – low voltage
P0336	Crankshaft position sensor circuit – signal interference
P0335	Crankshaft position sensor circuit – no signal
P2301	Ignition coil A (cylinder 1) – short to high voltage
P2300	Ignition coil A (cylinder 1) – short to low voltage or open circuit
P2304	Ignition coil B (cylinder 2) – short to high voltage
P2303	Ignition coil B (cylinder 2) – short to low voltage or open circuit
P0123	Throttle position sensor – short to high voltage
P0122	Throttle position sensor – short to low voltage or open circuit
P0459	Evaporative (carbon canister) purge valve circuit – short to high voltage
P0458	Evaporative (carbon canister) purge valve circuit – short to low voltage or open circuit
P0232	Fuel pump relay – short to high voltage
P0231	Fuel pump relay – short to low voltage or open circuit
P0601	ECM read-only memory – checksum error
P0262	Fuel injector, cylinder 1 – short to high voltage
P0261	Fuel injector, cylinder 1 – short to low voltage or open circuit
P0265	Fuel injector, cylinder 2 – short to high voltage
P0264	Fuel injector, cylinder 2 – short to low voltage or open circuit
P0108	Intake pressure sensor circuit – high voltage
P0107	Intake pressure sensor circuit – low voltage or open circuit
P0113	Intake air temperature sensor circuit – high voltage or open circuit
P0112	Intake air temperature sensor circuit – low voltage
P0650	Engine malfunction indicator lamp (MIL) – circuit fault
P0132	Oxygen sensor, cylinder 1 – short to high voltage or open circuit

P0131	Oxygen sensor, cylinder 1 – short to ground
P0031	Oxygen sensor heater, cylinder 1 – short to low voltage or open circuit
P0032	Oxygen sensor heater, cylinder 1 – short to high voltage
P0138	Oxygen sensor, cylinder 2 – short to high voltage or open circuit
P0137	Oxygen sensor, cylinder 2 – short to ground
P0037	Oxygen sensor heater, cylinder 2 – short to low voltage or open circuit
P0038	Oxygen sensor heater, cylinder 2 – short to high voltage
P0563	System voltage high
P0562	System voltage low
P0500	Vehicle speed sensor fault
P0505	Idle speed control fault

XIII CIRCUIT DIAGRAMS

Circuit diagrams for the charging, ignition and starting systems are shown below, reproduced from the factory drawings. Electrical repairs must be carried out by an authorised BENDA Moto Australia dealer or a licensed motorcycle mechanic.

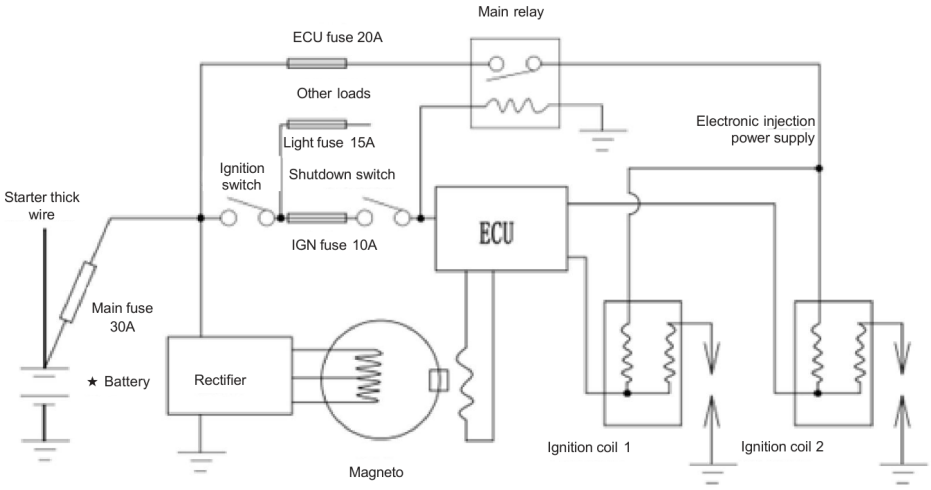

Electric circuit diagram of charging system

Figure 17 Charging system circuit

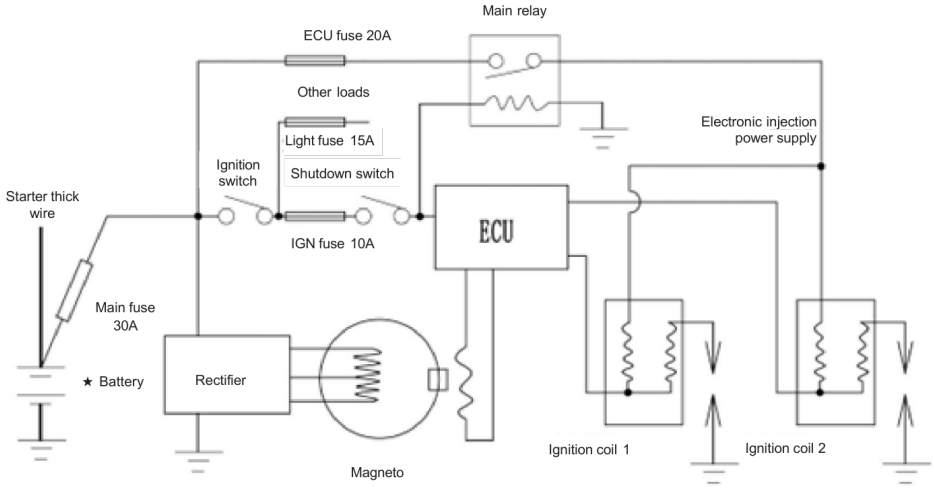

Electric circuit diagram of ignition system

Figure 18 Ignition system circuit

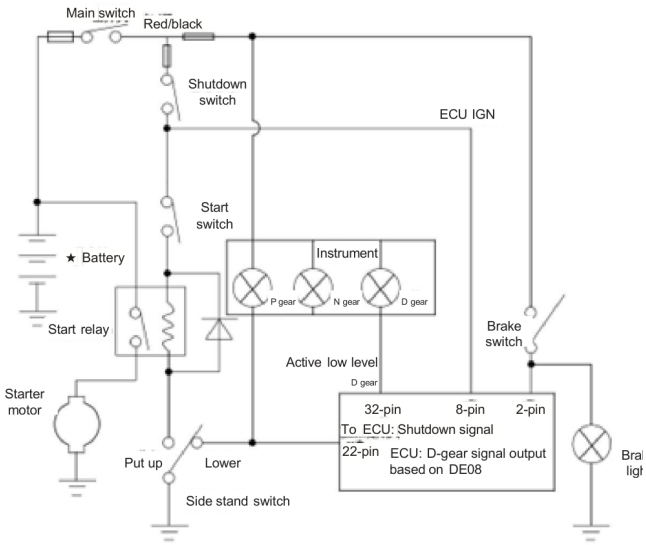

Figure 19 Starting system circuit (including side stand and P/N/D interlock)

XIV SERVICE RECORD

Ask the workshop to complete and stamp this record at each scheduled service, and keep your service invoices with it. You will need your service history for any warranty claim, and it adds value when you sell your motorcycle.

Service	Date	Odometer (km)	Workshop stamp and signature
1,000 km **First service**			
4,000 km **or 1 year**			
8,000 km **or 2 years**			
12,000 km **or 3 years**			
16,000 km **or 4 years**			
20,000 km **or 5 years**			
24,000 km **or 6 years**			
28,000 km **or 7 years**			
32,000 km **or 8 years**			
36,000 km **or 9 years**			
40,000 km **or 10 years**			
44,000 km **or 11 years**			

Service	Date	Odometer (km)	Workshop stamp and signature
48,000 km or 12 years			
52,000 km or 13 years			
56,000 km or 14 years			
60,000 km or 15 years			
64,000 km or 16 years			
68,000 km or 17 years			
72,000 km or 18 years			
76,000 km or 19 years			
80,000 km or 20 years			
84,000 km or 21 years			
88,000 km or 22 years			
92,000 km or 23 years			
96,000 km or 24 years			
100,000 km or 25 years			

UNLEASH THE RIDE

BENDA Moto Australia Pty Ltd
www.bendamoto.com.au

For servicing, genuine parts and warranty enquiries, please contact your local authorised BENDA Moto Australia dealer, or visit our website to find your nearest dealer.

Manufactured by Hangzhou Saturn Technology Co., Ltd.
Specifications and illustrations are subject to change without notice.

BENDA